The Windrow

Windrow NO 21 June 2025

Newsletter of The Scythe Association of Britain and Ireland



CONTENTS

From The Hayrick 2
Scything Events 3
International Events 10
Course Directory 13
Letters 18
Jims Competition Manual by Jim McVittie 19
Fixing a Raisserschnitt Blade by A. Rickard & R. Brown 21
The Roller Ball Peening Machine by Martin Stevens 22
First impressions of the SF Dengelapparat peening machine by Andi Rickard 24
Jaws – the Austrian Peening Machine By Richard Toogood 25
MOWSAICS! by Richard Brown 26
A Creative Adventure by Colin Close 30
Managing Halbathic by Peter Totman 34
Scythin' A tune Arranged by Ted Waldron 37

From the Hayrick

Well here it is!! As promised a second issue of The Windrow of 2025. I am not sure that there have ever been two issues in a year before certainly not during my incumbancy as editor.

This issue focusses largely on peening and in particular the various tools and innovations used for performing this art; yes it is an art as are all components of scything . Understanding the nature of the metal that a scythe blade is made from and how to make it sharp is as important as proper scything technique

I am glad to satthat I have had a response to one of the points raised on the letters page. Thanks to Jim Mc'Vittie for kicking things off. The information that accompanyed his letter can be found on page xx of this issue.
Grateful thanks also to Richard Brown and Simon Fairlie's contributions to the page please keep your replies coming.
Your replies matter. Why? Well although the "The Windrow" is primarily distributed to the members of SABI our mailing list is actually more extensive than that. Over the years people in all walks of life have come into contact with the scything community who have requested to be added to our list; (fashionable semi-colon!) hence your letters and their replies are widely circulated and have the potential to influence opinion and political direction. As a possible example I recently viewed an episode of 'Clarksons Farm' (sad aren't I!!) However it is interesting to watch the 'conversion' of a former petrol head to a gentler life. In this particular episode there was a discussion on what to plant in the coming season given the introdution by DEFRA of the new farming subsiudies. It turns out that for maintaining wild flower meadows in a proper state provides the highest subsidy per acre and not only that but the planting of herbal ley to improve the soil conditions is also generously subsidised. I cannot help thinking that this policy did not come about with some influence from the scything and other related communities.

Our cover features a portrait of Andi Rickard in ultra competion mode. Andi should be famous country wide as being the ONLY woman to become the overall scything champion of the UK. Yes you heard right she beat all the big strong men not once but twice. (it may be more but I don't have access to all the results) and she has been Ladies Champion forever! This proves beyond all doubt that scything is a skill and does not rely on brute strength (though it probably helps!)

Here I must make a plea...Every year I try and get 'The Windrow" published before International Peening Day which is usually the first sunday in April. It is always a struggle. One of the most time consuming parts are the courses and events pages. So here's my request, sort out your course dates as far in advance as possible and send me the information. Even if you change the dates later that is not so difficult to deal with as the bulk of the work can be done early on. If you are running an event please provide the wording and if possible a picture relating to a previous event at the location. Again as early as possible.

Please note that the Stiperstones Scything with a View has been added to the events section this issue.

I make no apologies for republishing thsi picture from David. In the last issue I did not have room to give it the description it deserves!



Luxury Peening Pony with adjustable sliding seat with backrest and universal leg excerciser
By David Kueglar

Finally a big thank you to all those who have given of themselves to allow these pages to be created.

Colin Close, Ed

SCYTHING EVENTS

GREEN SCYTHE FAIR 2025

THE UK PREMIER SCYTHING EVENT

Incorporating

The 19th West Country Scythe Festival

Sun 8 June 2025 11.00 am – 11.00 pm

Thorney Lakes, Somerset TA10 0DW

Advance ticket sales only.

This is a ticket only event please visit https://www.greenfair.org for tickets and more information: There are no tickets at the gate.

Scythe Championship
Speakers
Stalls
Kids area

Scythe and haymaking events
Crafts
Music

Pre-Fair Courses and Talks

Friday 6th-7th June Scythe Improvers Course

Saturday 7th June
Beginners Scythe Course
Horses in Harness
Leather Axe Mask
Learn To Sew a Pair of Hemp Drawstring Trousers
Eco Poetry Writing Workshop
Sharpening Woodcarving and Other Edge Tools
An introduction to Driving Horses
Spoon Carving
Make a Hay Rake
Bamboo Native American Flute Making
Make your own Earth Pigment Paints
Blacksmithing Workshop
Willow Weaving
Recycled Copper Jewellery Workshop
Copper Smelting Workshops
Tree songs walk with the Hedgesong Collective
The Fungi Cailleach
Introduction to Veteran & Ancient Trees
Using Participatory and Deliberative Democracy

Programme for 2025 Green Scythe Fair Saturday Scythe Workshops.

This year we will be offering some Morning courses (marked *) to the wider public advertised alongside other GSF courses on GSF Website at a fee. These courses can be booked by SABI members (some FOC).

See Course Details in appendix below.

On Saturday afternoon there will be other practical sessions and workshops which are open to SABI members and Scythe course attendees.

Note:
Entry to GSF Saturday requires registration and wristbands.
To register for Saturday admission Email Neil scything@greenfair.org.uk

Entry to the Green Scythe Fair and competitions on Sunday is by separate prebooked ticket only, and for which Saturday tickets are not valid.

Overnight Camping should also be prebooked using the link above if required.

Provisional Saturday Schedule

Morning: From	10am	Scythe Improver's Masterclass Day 2
	10 – 12	Scythe Refresher course* – with Adrian Thomas and Colin Close
	10 – 12	English Scythe Workshop* - with Danny Hodgson, Terry Standen & Mark Allery.
	11 – 12:30	Scythes in Grassland and Habitat management*– with Richard Brown
Lunch 1pm – 2pm		(times tbc)
Afternoon:		(times tbc on the day)
		Leading Groups and Teaching scything? - with Andi Rickard
		Exploring different Scythe and blade set ups to match the task (including for competitions!) - with Kevin Austin
		Freehand Peening with Phil Batten
		Dengel Apparat lever peening machine demo and peening service - with Richard Toogood
		Rollerball Peening machine demo – with Peter Blackwell
		Hay making
		Plus others tbc on the day
Evening:		
6pm		SABI AGM
7pm		Q&A Session on Scythes and Grassland management. Led by Richard Brown with other panel members tbc.

Appendix: Saturday Morning Workshop Details
As listed for prebooking on https://gsf.idloom.events/green-scythe-fair-2025/register

Scythes in Grassland and Habitat management
This workshop aims to present and discuss the pivotal role of the scythe in habitat management for wildlife. Scythes and people together are potentially a keystone element in developing and maintaining heathy ecosystems. 'No Mow' and Rewilding campaigns of recent years may seem to suggest otherwise. We will discuss how practically the different strategies do work together.
COURSE LEADER Richard Brown. contact richard@wildscythe.co.uk

Richard is a Botanist, Ecologist and Seedsman and will present the session based on his 40 years' experience promoting the creation and maintenance of wild flower meadows. He is also Chair of the Scythe Association.
£35.00 (SABI members may use the discount code 'Grasslandfree')

Scythe Refresher Course
Need a refresher? Want to compete? Try the Tutored mowing practice session!
Saturday 7th June 10am – 12pm
COURSE LEADERS: Adrian Thomas and Colin Close
Cost £30
For further info email beginnerscythecourse@gmail.com
Optional blade peening service £10 Contact Richard Toogood – 07594 506084 - toogood127@hotmail.com



Wandlebury Scything Festival
Incorporating
The Eastern Counties Scything Championship

Wandlebury Country Park
Wandlebury Ring, Gog Magog Hills, Cambridge CB22 3AE
Sunday 20 July, 10am - 4pm

Hosted by kind permission of Cambridge Past Present and Future.

Entry Free. Donations welcome.

There will also be a scything course on the Saturday.
To book go to:-
https://www.cambridgeppf.org/Event/learn-to-scythejuly25



Northern Scythe Festival &
Northern Scythe Championships
Sat 12 and Sun 13 July 2025
Bell Sykes Farm, Slaidburn, BB7 4TP
by kind permission of Peter and Lin Blackwell

An Introduction to the English Scythe
Green Scythe Fair – Saturday 7th June 2025, 10am–12pm








The English Scythe



It's a common phenomenon: you meet a nice fellow or gal and during a polite discussion about the weather and your respective interests, your passion for scything comes up. There's then a good chance that this fellow or gal will offer you their relative's old scythe that's been hanging in the old barn for decades.

If this has ever happened to you, you are in good company. It seems that old American, English, Scottish and Northumbrian scythes (and others) are cropping up in various sheds near you, as well as antique and bric-a-brac shops. You might have given it a go in your usual mowing spots, decided a bit of TLC was needed, and left it in your own shed for what might turn out to be another few decades.

However, if you'd like to restore this old scythe to its former glory, we've got just the thing. A group of traditional scythe enthusiasts are getting together on the Saturday before the Green Scythe Fair (7th June) to share their knowledge on how best to get these bulky beasts into racing condition. Like Shire horses, traditional scythes are beautiful, imposing and will confer extra cachet to their wielder in the competition area. With bulk comes grunt, more punch and a load more power. With the advice of Danny Hodgson, Terry Standen, Mark Allery and Richard Brown you'll be leaving the workshop with knowledge on how to create a beast so sharp and powerful you'll be handling it more carefully than you would your trusty Austrian.

The team will have grinding stones, hafting angle modification advice and even some trade secrets to share on how to restore snaths and nibs. They might even share pointers on how to scythe for competition success. This workshop will be a brilliant amalgam of green woodworking hints as well as backyard metalworking tips. We'll cover:

- Blade construction and history
- Blade restoration (including grinding and tang setting demo)
- Discussion on traditional snath designs
- NB: this workshop is designed to demonstrate the restoration of old blades and snaths rather than providing a restoration service

We invite all interested parties to book their place at https://gsf.idloom.events/green-scythe-fair-2025/register

See also https://www.greenfair.org.uk/scythe-info (scroll to bottom of page)

For any queries please email hand.powered@yahoo.com

Saturday 7th June 10am – 12am
COURSE LEADER: Danny Hodgson and others. Contact hand.powered@yahoo.com
£30 (SABI members may use the discount code 'Englishscythefree')



Scottish Scything Festival
Sat 19th July 2025

Cultybraggan Camp, Comrie, Perthshire

With the huge increase in scything over the last couple of years in Scotland this event is building up to be a classic! With the usual competitions, practice areas, workshops, talks and food and drink we are also going to have a farm games area and hay stack making. There is a scything workshop on the Friday run by experts Andi Rickard and John Grundy. You are encouraged to bring an instrument for the evenings entertainment and your scythe and a keenness to use it on the day itself!!

Camping will be available on Friday and Saturday nights. There are also a few self catering units on the site, for which it is advisable to book soon – http://www.cultybraggancamp.uk/self-catering

For further information contact Rob Brodie at robmaculture@yahoo.co.uk





FOR MORE DETAILS CONTACT SIMON COOTER ON 01743 792294 0R STIPERSTONES.EVENTS@NATURALENGLAND.ORG.UK

This will be followed on Sat 2nd Aug by the Marches Meadow Group Open Meadows Event with scything at The Stiperstones.

INTERNATIONAL SCYTHING EVENTS

Fête de la Faux
The Second Brittany Festival of the Scythe



Provisional Programme

Saturday:
Workshops for : scythe, hoe , sickle, braiding green rye and straw, sharpening tools, peening workshop and garden planting dicussion, cereals
Equipment stall.

Saturday evening:
Fez-noz and festive meal

Sunday:
Workshops, farmers' market, scything demonstration
competition: Mowing under fences and team mowing.

The programme is still open, so you can, if you wish come and lead a workshop or discussion. (There is an interpreter available) .
Volunteers are welcome.

Price Free but pay what your conscience dictates or what you can afford - Free camping - Meal offered for volunteers. https://faucher.bzh/fete-de-la-faux - contact: julierubiella@gmail.com - +33762938357

Note A Fez-noz is a traditional Breton (from Brittany, France) festival and night party characterized by collective dancing to traditional music and instruments, fostering a sense of community and cultural identity.

European Hand Mowing Championship

6 – 10 August 2025 Thundorf, Bavaria, Germany

Organised by the Thundorf-Straß Hand Mowing Association.

Wed 6 August: Exhibition Day. Comapny and club stands
Thurs 7 August: Guests act "The Daredevils" from Carinthia
Fri 8 August: Wine Festival
Sat 9 August: Gala evening with the awarding of start numbers.
Sun 10 August: The highlight of the week – the mowing competition for youth, women and men classes.

Andi Rickard has written to the Chairman of the host association saying that we would like to enter a British team and asking how we do that. If anyone is interested in taking part, either mowing or supporting, then please contact Andi – andirickard@me.com

Location: Gyimesbükk, Áldomáspataka (Ghimeükk-Fãget, Aldãmaç .
Organizers: Sárig Attila with his family and Carpathian Escapes
Supporters:

The Csángó people living in the Gyimes Valley possess a knowledge that represents an exceptional value for the whole of Europe. The ancient Csángós settled in a wild, remote valley in the Eastern Carpathians and in order to survive they had to develop a special life and land use style that was in harmony with nature.

Hay making is the most important activity in the Gyimes Valley because people here are mainly occupied with animal husbandry. Through decades of work they created some of the most biodiverse mountain hay meadows in the world.

The Hay Making Camp would like to introduce participants into this type of landscape-creating, nature-respecting lifestyle.





Nearly all the food served at the camp is organic because the ingredients are grown and produced by the Sárig family on their own farm by Csángó traditions. The family uses mainly human and animal power to produce food which means that machine usage is kept to a minimum. We hope that these are good reasons for our guests to spend a whole week in "Csánglia" with pleasure.

Participants at the hay making camp can contribute to the survival of this beautiful landscape that became so magical mainly because of traditional hay making. During the six days of the event participants are also invited to get a personal insight into the world and lifestyle of the Csángós.

Everybody is warmly welcome!

Planned programme
The programme is subject to change according to weather conditions!

1st Day, Sunday: in the evening everybody shall meet at the Áldomás Guesthouse in Áldomáspataka Village, Ghimes municipality for welcome and dinner.

2nd Day, Monday: 8 AM breakfast, then a local craftsman show us how to make scythes handels and wooden rakes in traditional way. 1-3 PM lunch and siesta, after that we learn how to mow the grass whit the scythes. At 7 PM dinner, after which guests from abroad are given the possibility to make a short presentation about themselves and to highlight what makes traditional lifestyle valuable.

3rd Day , Tuesday: We'll start the day early in the morning whit mowing the grass on a field next to the village. After the breakfastin a small cheese factory we learn about the cheese making procedure, than we go to pick mushrooms in the surrounding forests. After lunch we'll turning and collecting the hay that has been cut, and if we have more energy, we can continue mowing until 7 pm dinner.

4th Day, Wednesday: 6 AM Early mowing in the morning for early risers. At 9 AM we take breakfast. After breakfast we'll collect the hay mowed last day. After lunch everybody shall prepare for a hike up to the mountain hay meadow. We will make our dinner on a camp fire, and after sundown we prepare our sleeping bags and go to sleep in hay in the hay barns.

5th Day, Thursday: Early start whit mowing in the sunrise on the top of the mountain. Breakfast at 9 AM, then we'll continue mowing. After lunch we make a walk on the mountain meadow to learn about meadow biodiversity with the help of a specialist, than mowing 'til dinner time. Camp fire, sundown watch and sleeping in the hay barns in sleeping bags.

6th Day, Friday: breakfast at 8 AM; most of the day will be spent with gathering the hay, making hay stacks and pulling them to the barns, loading the hay into the barn. In the afternoon we leaves the mountain and will have dinner back at the guesthouse. After dinner evening party with local traditional music and dances.

7th Day, Saturday: breakfast at around 8 AM, followed by a short evaluation of the week, after which farewell and everybody shall head home.

Participation fee: 499 EUR/person. The fee includes simple village accommodation, breakfast, lunch, dinner and participation in the activities and programmes. Children are welcome.

Registration deadline: 01 July 2024. The number of participants is limited to a maximum of 20. A 100 EUR deposit is kindly requested upon registration.

Practical information: this is a Hungarian ethnic region, bring a Hungarian phrasebook. Be prepared for any weather – it changes quickly in the mountains, wear layers, working clothes, sturdy shoes. Gardening gloves and a sun hat and sun cream are recommended.

Please think about nature, and if you can, travel to us whit a train! Railway stations: Miercurea Ciuc, Ghimes.

Nearest airports: Bacau (99 km), Brasov (151 km), Targu Mures (200 km), Sibiu (240 km), Bucharest (293 km); If it is necessary, we can provide an airport transfer.

"Hay meadows provide an immense range of benefits to farming communities and wider society. They create some of Europe's most spectacular scenery and cultural landscapes. Simply to watch this natural, environmental and cultural heritage disappear before our eyes is, surely, not an option we can consider," said HRH the Prince of Wales in a message to our policy seminar at the European Parliament, Brussels, 2012. Watch the video at http://www.youtube.com/watch?v=aGhHtbF6zKk

Contact: For registration, transportation possibilities, optional tours before or after the event or any other detail please contact Sarig Attila, (aldomaspataka@gmail.com.), Tel. 0040727859882 and
Carpathian Escapes, https://carpathianescapes.ro/ , 0040770345948



COURSE DIRECTORY

Adrian Thomas*
North Devon
adrianthomas59@gmail.com
I run training courses either at my home in Buckland Filleigh or at a local site of your choice, for individuals or for groups. I sell scythe kit and offer a blade peening service.

Courses:
- Please email for details

County Served:
- Devon

Andi Rickard*
Somerset
andirickard@me.com www.scytheschool.com

Scythe tutor with 13 years teaching experience.
UK ladies champion.
Running courses in the South of England from April to October.
Also available to book in the Midlands / North / Scotland the weeks either side of 19th July.

Courses:
Please go to my website for full course dates and details and to book.

Confirmed dates so far:-

- 6th April -Peening Workshop for International Peening Day
- 12th April - half day Spring recap course
- 26th April - Scything for Beginners
- 27th April - Scything for Improvers
- 3rd May - offering "have a go" sessions at Toby's Garden Festival (Powderham Castle) (Go to Tobygardenfest.co.uk to buy tickets)

County Served:
- Somerset

Beth Tilston*
Forest of Dean
https://bethtilston.co.uk/scythe-courses-in-the-forest-of-dean/

Day long courses and one to ones with a teacher of 10+ years experience. Learn everything you need to get mowing.

Courses:
- Flaxley, Forest of Dean: 20th July
- Blakeney, Forest of Dean: 17th August
- One to ones available in Blakeney, Forest of Dean. Contact bethtilston@googlemail.com
- 30 minute Pay What You Want online course available at https://cloudcottageland.vhx.tv

County Served:
- Gloucestershi

Chris Hayes
Wexford,
Irelandchris@crannogmedia.ie
https://www.scythe.ie

I have been teaching scything for over ten years all over Ireland and sell scythes through my website.
My courses cover everything you need to get cutting confidently and give you the skills necessary to keep your scythe in top condition.

Courses:
Follow on Instagram @scythealive for updates on courses.

Confirmed courses for 2025-
- Irish Seed Savers, Co.Clare May 24th and October 4th
- Lismore Castle Gardens, Co. Waterford June 22nd
- Badgers Hill Farm, Wexford Dates TBC

County Served:
- Midlands East
- South East
- All Ireland willing to travel

Chris Riley*
North Dorset
chris@pratensis.net
http://www.pratensis.net/

With 13 years experience, I provide beginners' courses, as well as bespoke instruction at any level. I sell Austrian scythe equipment. I operate mainly in the Wessex area, but it can sometimes also be feasible to go further afield. See my web site for more information.

Courses:

- Saturday 21st June 2025 – Scything Workshop (9.00am – 1.00pm) – Vallis Farm, Egford, Frome BA11 3JQ
- Friday 27th June 2025 – Meadow Management: Learn To Scythe – Kingcombe Centre, Dorset DT2 0EQ
- Friday 4th July 2025 – Practical Scything for Managing Wildflower Meadows – Wadhurst Park, East Sussex, TN5 6NT
- Saturday 5th July 2025 – Practical Scything for Managing Wildflower Meadows – Wadhurst Park, East Sussex, TN5 6NT
- Sunday 27th July 2025 – Meadow Management: Learn To Scythe – Kingcombe Centre, Dorset DT2 0EQ

County Served:
- Dorset
- Gloucestershire
- Hampshire
- Somerset
- Wiltshire
- All England willing to travel

Clive Leeke*
Berkshire
hedgecraft@theoldfarmyard.co.uk https://www.theoldfarmyard.co.uk/

Fourteen years' teaching experience since qualifying. Courses in scything and wildflower meadow management on own meadow in South Oxon, or on your land by arrangement.

Courses:
- Introduction to Scything. Gallowstree Common, South Oxon. Saturday, 20th July 2024. £85 pp
- Combined Course: Introduction to Scything; Improve Your Scything Technique, With Introduction to Peening Gallowstree Common, South Oxon. Saturday, 7th September 2024. £85

County Served:
- Buckinghamshire
- London W
- Oxfordshire

David Kuegler*
Parrysfield, Orcop Hill, Hereford
david.kuegler@btinternet.com
https://www.instagram.com/parrysfieldorcop/

We cover all aspects of Scything in a fun filled day, either Parrysfield or your meadow. https://www.instagram.com/parrysfieldorcop/
I sell fully prepared Scythe Kits: oiled, peened & sharp!, plus hay rakes & hay forks, & beautiful Peening ponies too!

Courses
- 1:1 Courses anytime/anywhere to suit March-December
- Group Courses up to six scythers, every second Saturday of the month March-October

County Served:
- Worcestershire

Heather Beaton
Lochalshheather.beaton@lochash.uk

Scythe courses run on the community land of the Plock. One-day courses cover the basics in scythe set up, peening and sharpening and mowing. One to one courses can be arranged, as can courses at a location of your choice. All proceeds go to community projects within Lochalsh.

Courses: Please contact the above email address.

County Served:
- Highlands and Islands

Helene Ducrotoy and Danny Hodgson
Near Whitland, West Wales
hand.powered@yahoo.com
www.handpowered.co.uk

Courses provided by two tutors to groups of up to 11 attendees. 1- day and multiple day courses in scything technique, maintenance, hay making and meadow management. Courses are suitable for beginners or experienced scythers and we are happy to travel to meadows anywhere in the UK. Scythes available for purchase at courses.
We specialise in repurposing and restoring vintage scythes. Restoration includes repair or reconditioning of blades and production and repurposing of snaths. We also sell custom-made scythes with hand-made snaths produced from local wood.

Courses: See website & email info above

County Served:
All England & Wales

John R Grundy*
Northumberland
contact@wildernesstamed.com https://www.wildernesstamed.com/scything

Training groups and individuals from conservation charities, friends of groups and small holders. More information at and

Courses: Information and bookings see above

County Served:
- Durham
- Lothian & Borders
- Northumberland

Kevin Austin*
Cornwall
kevin@skyegrove.co.uk https://skyegrove.co.uk/

For all your scything needs, training and equipment, specialising in the use of the Austrian scythe. Bespoke courses for singles, couples and groups and tailored for beginners and improvers

Courses:
- Cornwall Scything Meet & International Peening Day 2025 ~ Sunday April 6th 2025 10:00 — 4:00
- Saturday 10th May 10.00-4.00 Beginners Course
- Saturday 17th May 10.00-4.00 Beginners Course
- Saturday 31st May 10.00-4:00 Beginners Course
- Saturday 5th July 10:00-4:00 Beginners Course
- Saturday 19th July 10:00-4:00 Beginners Course
- Saturday 26th July 10:00-4:00 Beginners Course
- Scythe Masterclass at the Green Scythe Fair
- Saturday 24th May and Saturday 12th July 2025

County Served
- Cornwall:
- Devon

Mary Ellis*
southeastscything@gmail.com
www.facebook.com/profile.php?id=61564912050178

Learn to scythe in a day with others, or tailored 1 to 1 tuition in
scything, sharpening and peening, in Kent, Sussex and Surrey. Learn the joy of an ancient skill. Please email southeastscything@gmail.com for more info.
"I have never seen anyone pick up a scythe and not smile."

Private and individual courses by arrangement.
Austrian and English scythe courses and restoration of English scythes.
Courses are delivered by two tutors to individuals or groups (11 max). 1-day and multiple day courses in scything technique, maintenance, hand hay-making and meadow management. Talks also delivered in meadow conservation.
Scythes available to purchase at courses.

Courses:
'Learn to Scythe in a Day' courses
- Sat 17th May, Wittersham, Kent, TN30 7PX.
- Fri 25th July, c/o Surrey Wildlife Trust, Compton, Surrey, GU3 1EG.

Bookings at
www.surreywildlifetrust.org/events/2025-07-25-introduction-scything.

Dates to be confirmed:
- 5th May & early Sept Woodchurch Kent TN26 3PF
- Early Augst Betchworth Surrey RH3 7DN.
- Late Augst Hurstpierpoint West Sussex BN6 9BD.
- Late Sept Nymans Handcross W Sussex RH17 6EB

We provide external courses at your venue

County Served:
- All England, Scotland and Wales

Neil Foulkes
Co. Leitrim, Ireland
neilfoulkes62@gmail.com

Formal and informal workshops on mowing and maintenance, including through local authorities. Mainly covering NI and the border counties. I also sell Austrian scythes and equipment

Courses:
- Please email to the address above.

County Served:
North West
Northern Ireland

Nicole Clough*
Oxfordshire
/https://joyofscything.uk/

I provide training in the use, maintenance and joy of the Austrian scythe, within Oxfordshire, nearby counties and southern Midlands, and further afield on request. Please visit my website for 2025 venue dates or to enquire about arranging a bespoke session.

Courses:
- Saturday, 14 June – Cogges Manor Farm, Witney, Oxfordshire – Available to book via Cogges website.
- July and August dates – TBC – Egrove Park, Oxford, Oxfordshire. Bookings and enquiries for this course are direct through me. To learn more about this haven for wildlife located on the southern edge of Oxford, have a look at this article by the Grounds Manager.
- Saturday, 30 August – Cogges Manor Farm, Witney, Oxfordshire – Available to book via Cogges website.
- Please subscribe to my mailing list to receive course information at https://joyofscything.uk/courses2/

County Served:
- Oxfordshire
- Buckinghamshire
- Gloucestershire
- Hertfordshire
- London W
- Northamptonshire
- Warwickshire
- West Midlands
- All England willing to travel

Philip Batten*Dyfed Permaculture Farm Trust, Carmarthenshire
info@scythecymru.co.uk https://www.scythecymru.co.uk/

Learn to scythe or improve your skills, learn to peen from a master peener.
Workshops give you – hands on experience; a chance to "try before you buy"
or get your own scythe set up well; a visit to a smallholding where the
scythe is integral to the management and is used year round in a variety of
situations.

Courses:
- For Introductory workshops see www.scythecymru.co.uk/product/introductory-scythe-course/
- For Peening workshops see www.scythecymru.co.uk/product/peening-sharpening-workshops/

County Served:
- South West Wales

Rachel Remnant*
Winchester, Hampshire
rachel@landloreconsulting.com https://www.landloreconsulting.com/

Expert habitat advice, with a specialism in floodplain meadows and community engagement.
I teach an Introduction to the Austrian Scythe and can provide 1:1 tutoring or teaching and contract mowing for meadows.

Courses:
- Sun 7th April 11am – 3pm Winchester, Hampshire. International Peening Day, £35
- Wed 9th April Wormholt London, An Introduction to the Austrian Scythe, £95
- Mon 14th April Winchester Hampshire. An Introduction to the Austrian Scythe, £95
- Thurs 24th April Fulham London An Introduction to the Austrian Scythe, £95
- Sun 27th April Winchester Hants. An Introduction to the Austrian Scythe, £95
- TBC Fri 9th May The Vyne Sherborne St John Hants An Introduction to the Austrian Scythe £95
- TBC Fri 16th May, The Vyne, Sherborne St John, Hampshire. An Introduction to the Austrian Scythe, £95
- Mon 2nd & 3rd June nr Winchester Hampshire Immersive meadow and Austrian scythe course inc camping £240
- Fri 18th July Winchester Hampshire. An Introduction to the Austrian Scythe £95
- Mon 8th September Winchester Hampshire. An Introduction to the Austrian Scythe £95
- Sun 5th October, Winchester, Hampshire. An Introduction to the Austrian Scythe, £95

County Served:
- Hampshire

Richard Brown*
Kings Lynn, Norfolk
richard@wildscythe.co.uk
https://wildscythe.co.uk/calendar/

I offer courses and individual tuition in East Anglia and East Midlands. As an experienced Botanist, Ecologist and seedsman I can tailor courses to include both practical scythe instruction as well as meadow management theory. I sell scythes and offer fitting and peening services from my scythe workshop and meadow.

Courses:
Scheduled Scythe and grassland management courses in June July and August. Other individual and group courses and tuition available by arrangement see https://wildscythe.co.uk/calendar/

- 6th April – International Peening Day – event. Lovells Hall, Norfolk, PE34 4PL.
- 17th May – Scythe maintenance, peening and setup workshop. Norfolk, PE34 4PL

cont:

- 18thJune – Learn to scythe and grassland management course. Norfolk, PE34 4PL
- 2nd July – Learn to scythe and grassland management course. Norfolk, PE34 4PL
- 10th July – Learn to scythe and grassland management course. Beds. MK44 2JU
- 16thJuly – Learn to scythe and grassland management course. Heacham, Norfolk, PE31 7LJ
- 23rd July – Learn to scythe and grassland management course. Reepham, Norfolk, NR10 4RA
- 13thAugust – Learn to scythe and grassland management course. Heacham, Norfolk, PE31 7LJ
- 4th October – Autumnal Aftermath Scythe Session. Lovells Hall, Norfolk, PE34 4PL

County Served:
- Cambridgeshire
- Leicestershire
- Lincolnshire
- Norfolk
- Suffolk

Rob Brodie
Fife, Scotland
robmaculture@yahoo.co.uk
https://quietertimes.org

Beginners and Improvers scything workshops suitable for anyone interested in using a scythe to manage green spaces. Blade repair and peening service available too. Please email to arrange a workshop, a blade repair enquiry and for more information. Also visit https://quietertimes.org for more details and to see current workshop dates.

Courses:
Please email or see website

County Served:
- Lothian & Borders

Ross Adams*
Totnes, South Devon
ross@abundantgardens.uk https://www.abundantgardens.uk/courses/

I run fun and informative courses covering everything needed to get you mowing efficiently and effectively. I have courses for beginners and improvers, I also offer 1-1's, 1-2's and I can run a course on your land. For more information have a look at my website https://www.abundantgardens.uk/courses/

Courses:
- April 5th Foxhole community garden, Dartington
- May 17th Foxhole community garden, Dartington

County Served:
- Devon

Simon Cooter*
The Stiperstones National Nature Reserve
simon.cooter@naturalengland.org.uk

Site manager for the Stiperstones National Nature Reserve, courses are usually run from the nature reserve base where practice can be carried out on a variety of vegetation and slopes.
All proceeds go to the management of the nature reserve.

Courses:
- Introductory Scything and meadow management course, Sunday 22nd June, 10am -4pm. £70pp
- Introductory Scything and meadow management course, Monday 27th July, 10am -4pm. £70pp. (followed by optional free scything sessions all week).

County Served:
- Shropshire

Simon Fairlie*
Teign Valley near Exeter
07778898031 scythes@myphone.coop
https://www.thescytheshop.co.uk

Scythe courses covering basic skills, haymaking, grassland management and jig and freehand peening. One or two days. Complete range of scythe equipment available to buy. One-to-one tuition by appointment. Also three-day course with Kevin Austin: Outdoor Manual Tools for Novices, including scythes, forestry, hedging and garden tools etc

Courses:
One or two day courses Including grassland management and haymaking.At
- Fairhill Farm, Pound Lane, Bridford EX6 7LQ 24-25 May 2025
- Fairhill Farm, Pound Lane, Bridford EX6 7LQ 26-27 July 2025

Three day course with Kevin Austin:
- Outdoor Manual Tools for Novices, 12-14 September 2025
- One-to-one tuition by appointment.

County Served:
- Cornwall cont:
- Devon
- Dorset
- Hampshire
- Somerset
- Wiltshire

Steve Tomlin*
Manchester
stevetomlin8@gmail.com
https://steveTomlinCrafts.co.uk/learn-to-scythe

Practical, fun courses covering all the skills to use and maintain your scythe. I have been teaching scything since 2010, am author of 'Learn to Scythe' and sell scythe kits. I can travel to teach you or your group at your venue.

Courses:
Book your place on Eventbrite: Learn to Scythe
- 25 May, Foxglove Covert LNR, N. Yorkshire
- 31 May, Bell Sykes Farm, Slaidburn, Lancashire
- 14 June, Brigflatts Meeting House, Sedbergh, Cumbria
- 20 July, Bell Sykes Farm, Slaidburn, Lancashire
- 1 August, Broadrake, Chapel-le-Dale, Yorkshire Dales
- 20 September, Brigflatts Meeting House, Sedbergh, Cumbria

County Served:
- Cheshire
- Cumbria
- Derbyshire
- Greater Manchester
- Lancashire
- North Wales
- Staffordshire
- Yorkshire - South
- All England willing to travel

Susanne Raven*
Co Cork, Ireland
rowanlily@yahoo.de http://www.susanneraven.ie/

I run improvers' courses and scythe clinics for individuals or small groups of people. I also offer scythe mowing and peening services and can provide information regarding scything in Ireland.
You're welcome to join the Facebook group An Faobhar – Scythe Group Ireland at:
https://www.facebook.com/groups/215248119929200

Courses:
- Improvers' Scythe Course at Fota, Co. Cork, Saturday 29th March, 10am-4pm.
  For bookings, please visit:-
  https://bookings.fotahouse.com/Event/FHEV02

County Served:
- Cork & Kerry
- All Ireland willing to travel

LETTERS

This is the new Windrow letters page hopefully to start some interesting discussions on scything related subjects.
If you would like to write or respond to letters for this page please address your correspondance to itchka@compuserve.com with WLETTERS somewhere in the subject.

About Hilda

Dear Editor
No need to apologise for Hilda. She is a vast improvement on Poldark.
Simon
Simon Fairlie
Fairhill Farm, Pound Lane, Bridford, EX6 7LQ

No Mow May?

This initiative and slogan from Plantlife has proved very popular with gardeners and I applaud it for changing the established public perception that an uncut front lawn is an unacceptable indicator of neglect and laziness. The no mow campaign has helped promote the value of wildlife friendly flower rich grassland. It has been particularly good for promoting scythe sales when people adopting 'no mow may' find that their existing lawn mower cannot deal with the tall growth aftermath!

So, what is my gripe and why am I blaming this campaign slogan for contributing to 'No Mow anxiety'?

The problem is not the campaign itself which Plantlife carefully and specifically targeted at domestic lawns and for the temporary period in May– it is the negative 'No mow' slogan.

Plantlife actually does give some very sound advice on adopting the concept (including mow-saics). see https://www.plantlife.org.uk/everything-you-need-to-know-about-no-mow-may-and-the-no-mow-movement/
The issue as I see it is the unintended consequences arising from what people actually take and understand from the messaging, and what they choose to do with it.

The most fundamental thing I pick up from people and the media is that people have simplified the message: they forget the 'May' context and now believe that mowing is generally bad and should be avoided or delayed as far as possible. The result of this 'no mow anxiety' is that I find myself selling more scythes but having to spend more time offering counselling to their users that it is both OK and good to mow!

The other typical concern I hear from other conservation professionals is that some adoptees of 'No Mow May' "invite" pollinating insects into their garden with flowering lawns, then come 1st June blitz them all obliterating them with strimmers and even worse chemical sprays! and last paras before Rewilding heading

Wild flower meadows have become increasingly popular in gardens. I would prefer these were promoted more strongly over more limited value 'no mow lawns'.
Less of the negative 'no mow' and more positive 'mowsaic' please!
Richard Brown

Quality judging

Fellow scythers, I write regarding the methods and standards of judging quality in the competition arena. As quality directly affects the result of competition it would seem wise to standardise this across the UK. I do not know what the system is in use Ireland but I do know that in Scotland a different system of scoreing quality exists. Whilst the judgement of quality is somewhat subjective there do not seem to be any guidelines available from SABI. It would seem to me that with the number of entrants to the competitions on the increase it would seem timely to address this.
Colin Close

Colin
In fact quite a lot of work has been done on judging over the years and I have even written a guide! I had always thought it was a bit to dry for general readers.

Jim McVittie

A letter fom Holland

Hi Colin,

Thank you for sending us a copy of The Windrow! Unlike some of your fellow scythers from the UK and abroad, I did receive the first email you sent on the 3rd of April. I've distributed the link among my friends from the Scythe Brigade.
We are impressed with the diversity of the articles and the in depth contributions - and we read them with great interest. In the Netherlands we can only dream of such a magazine for the Dutch language area… maybe if we teamed up with the Belgian scythers?

Carleen de Graff

Please remember to put WLETTERS in the subject line of your email when sending letters or replies for publication on this page. ED

Jims Competition Manual

by

Jim McVittie

Site examination

Walk round the site looking for variability across the site

- Areas of growth that are different from the each other. For example area of poor growth or of better growth. Can you work things so that each competition is on a different area?
- Dips or higher bits. How can you accommodate them? For example can you avoid an old ditch line by leaving a wider plot gap in part of the field?
- Slopes. Growth is normally greater at the foot of a slope. It is difficult to allow for this but you could consider using the plots in runs across the slope so that the elite mowers all have similar ground to mow.
- General unevenness. The best way if you have space is to mark out more plots than you need and not to use some. Once the grid has been cut out you can walk round and examine each plot in more detail.

Other things to consider are the best places for each competition so that the audience can see it and also if anything needs to be away from the audience for safety reasons. E.g. the scythe vs strimmer.

Plot Gaps

Plot gaps are usually 1 to 2m wide

- 2m gaps are good if you have space. They are easy to cut with a scythe. There is no need to move the grass away - simply rake it into the middle. Mowers can cut adjacent plots starting at any corner.

- 1m gaps take up less space but create problems. They are difficult to cut with a scythe even when a short blade is used. The grass has to be carried out. You cannot cut adjacent plots at the same time unless you impose a "start corner" on all competitors.

- 2m one way and 1m the other is a possible compromise. You can take the grass from the 1m direction into the 2m gaps without moving it too far. You can cut all the plots in one direction at the same time.

Top tips.

Grass is much lighter to move if you can leave it for a day after cutting.
If cutting out with a mower, make narrow gaps the exact width of cut but make wide gaps less than two widths or you might leave small uncut bits down the middle. You need a gap of at least 2m to turn a mower at the ends.

Marking out

Start by laying a straight line out along the front of the plots. Then there are two easy options

Plenty of space or large areas

Measure what distance you need along the front and add a few metres (A-B). Mow to the line. Knot the marker string to that length. Go to one end and mark a right angle with a 3,4,5 triangle. 18m, 24m and 30m works well if you have a 30m tape. Lay out a string a right angles to the front. Make this the length you need plus a few metres (B-C). Cut on the outside of this line. Mark another right angle and bring your front string over to mark the length required at the back (C-D).

Tight for space or small areas

Measure the exact distance you need along the front and knot a rope to that distance (A-B). set a right angle and measure the exact distance you need (B-C). Knot a rope to that distance. Bring the front rope to the back and keeping the side rope tight walk through the crop to mark the back corner (D).
Measure all distances from A-B or B-C. You can adjust the plot gaps a little if you find you are slightly short at one end.

Notes

To lay out a string hold both ends in the air, pull it tight and lay it onto the top of the sward. Put one pin in the ground and then pull the other tight and put that in the ground. Make your string a couple of metres longer than required so that you are not cutting close to a metal pin, especially if you are using a mower. Tie rope off close to the ground as it will stay tighter.
Long lengths of string are difficult to lay straight. Add some intermediate pins and line these up by eye.
Don't gather the strings up into loops when moving them as they will tangle when you come to let them out. Instead, just drag the lengths round the field.
When working with a ball of string, leave the cover on and pull the string from the middle.

Randomising plots

Usually you want to have a seeded randomisation so that the slower mowers all compete at once. The simplest way is to decide how many plots you are cutting a time and to group mowers in that number either using the results of heats or prior knowledge. You can randomise mowers in groups. For example 1 to 6, 7 to 12 etc. either by randomising the mowers on paper or adding plot markers randomly in the field. The latter is easier if you have to avoid cutting adjacent plots at the same time.

Cutting the plots

Draw up a recording sheet with a grid map showing each plot and a orientation marker such as the peening tent. Make grid big enough to write in all the data required.
Recorder to write the name of each competitor against each plot together with any special information - woman, English, veteran, child (with age).
Time keepers to record time and not to delete it until they it has been written down by the recorder who will always put them in the same place in each grid so there is no confusion between between times and quality scores.
Have a raker ready to move any grass away from uncut plots but don't rake plots off until all have been cut.

Quality scores and deciding placings

If possible, have three judges and a recorder.
I score on a 1-9 scale but others use a 1-10. Higher numbers are higher quality.
First, walk over the area and find the best and worst plots giving each a score and marking them with a stick so you can refer to them easily. Comparison between years cannot be absolute but do try to allocate scores on a common scale. For example, in difficult conditions you may not have any plot above 7.5.
Work through the plots giving each a score referring to the best and worst if required to remind yourselves of the scale. Do not take too long - the first number you come up with is usually the best. Do this blind without looking at the competitors name or their time.
Ask the recorder to point you to the likely winners in each class - overall, women etc and compare these plots to be sure that your initial scores stand up to close comparison.
Sit down in a quiet place. For each class ask the recorder to read out the times and quality scores for the contenders without telling you their names. Write these down and decide the first, second and third places. This requires some judgement but you are, after all, the judges!
Some judges find it useful to apply quality time penalties to highlight which competitors are contenders for places. Some apply a fixed penalty of 15 seconds per quality point. Others use 20 seconds. Richard Brown calculates adjusted scores using the formula:
time (in seconds) x 10 /quality score. This applies greater adjustments for lower scores and slower cuts as shown in the table:

Time penalties (seconds) from Richard Brown's formula for various cutting speeds and scores

	Time to cut (minutes)			
	2	3	4	5
Quality Drop				
9 to 8	17	25	33	42
8 to 7	21	32	43	54
7 to 6	29	42	57	71
6 to 5	40	60	80	100

Any adjustments should be treated as a rough guide to the final placings which will require the assessment by the judges.

Note on quality

Most scorers work to the mantra “short and even is best” and most competitions are judged on that basis. However, agronomically, you can cut too short as soil contamination can interfere with silage fermentation and scalped grass only re-grows slowly as many of the basal buds will have been cut off. It was notable, at least to me, that my 8.5 at Peter's in 2021 was already growing green the following day while his 9 was still yellow.

Finally, announce the results and take the flak!

Fixing an Overpeened Raisserschnitt Blade

by

Andi Rickard & Richard Brown

Last year, Richard Brown helped me rectify a peening mishap with my Rasierschnitt blade. Here's an account of what Richard taught me.
My Rasierschnitt blade was over-peened by a combination of jig caps with a too-acute profile and some heavy-handed hammering.



The repair had 6 stages:
1. Examine the peening caps and the blade to establish how to approach the repair.
The acute chisel-like profile to these particular caps had focused the energy in too narrow a contact zone with two consequences.
Firstly, the caps impressed a more pronounced pattern of circular grooves into the blade, (in extreme cases this can actually cut through rather than spread metal – especially a sharp number 2 cap on a thin edge).

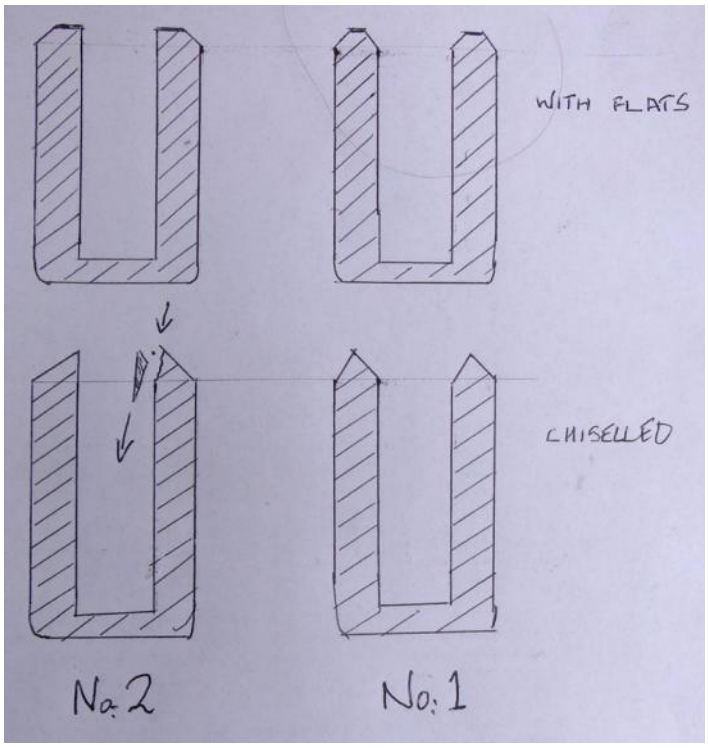

Secondly, on the jig side, the forces focused in a narrow area of contact can lead to chips fracturing off the jig cap. This had happened with the number 1 jig leaving even sharper ridges.

The over-peening with number 1 cap had created a bit of a step. There were also a few micro-cracks appearing on the blade edge from overworking the steel.

2. Reprofile peening caps using a linisher (fine belt-sander).
This removed the 'chisel' ridges and sharp edges and created narrow flats on both jig caps. These flats c.1.0 mm wide spread the working contact area giving a smoother result and removing the risk of metal fracture. (On the number 2 cap the flat does extend to the inner edge so will peen as close to the edge of a blade as a jig can).
3. Inspect and deal with blade edge cracks and distortion.
Distorted or folded damage to the blade edge was gently hammered back in alignment with a peening hammer.
File back the over-thinned blade edge using a flat chainsaw file. File the bevelled side back enough to remove over-worked metal with cracks at the edge. File also to bring down the stepped shoulder a bit.
4. For this grass cutting blade requiring a finer bevel, flat filing was followed with light jig peening, using number one, followed by number two caps.
This light hammering was enough to regularise and smooth out this previously over-peened edge.
Whilst peening keep checking the results as you work, looking and feeling the edge with your fingers to see you are getting the right effect: aim for a gently tapering concave bevel terminating in a very thin edge in the very last 0.5mm or so.

5. Freehand peen the edge for the best finished result.
Freehand edge-peening after jig peening can produce a finer edge than jig peening alone. It will hammer out the edge burr created by the jig post (otherwise removed with whetstones) and further evens-out the bevel as part of the repair.
6. Hone the blade edge, first with assertive use of a coarse carborundum whetstone to put the secondary micro-bevel back.
Hold the stone so that the entire rounded edge can be stroked away from the rib, on the top face of the blade. See photo for hand position.
Feel for the appearance of a burr on the underside of the blade. This will indicate when the micro-bevel has reached full thickness of the thin edge and highlight if any patches have been missed.

Richard then removes the coarse burr on the unbevelled underside quickly by switching to a medium stone, e.g. le saurat, and uses the FLAT face of the stone, stroking lightly TOWARDS the rib (not away) enough to just rub the worst of the burrs off before regular honing.
Hone the newly formed micro bevel with a medium



fine whetstone, e.g. Le Saurat, drawing the stone away from the rib, on both sides, (as usual for honing).
Follow this with finer stones like a Rozsutec for best results.
Remember to keep key principles in mind and examine the blade with sight and touch to measure the effect of your progress.
Finally, reassuringly over-peening is not a disaster for the blade, it can be rectified and learnt from.

Footnotes from Richard:
File back on both faces – Most of the filing is focused on the bevelled side, I was mainly taking off burrs and any protruding damage from the underside.
The filing motion is back and forth – strictly filing should make contact in the cutting direction only to reduce wear on the file. As you observed I do keep contact in both direction as it is easier to keep the angles constant, but with only lightest pressure on the return stroke.
Note, on a ditch blade, this bevel may be just right to then follow with honing. I omitted this as it needs a bit more explanation and moves away from your Raisierscnitt narrative.
Ensure the pass with the number 2 cap isn't pushed up t i



ght against the post, leave space for the edge to be flattened. This was what I showed you as how I can finish on my machine where I can control the blade position and hold it off with two hands. I don't think it would work using the jig normally with a hammer.
Silicar whetstone – the standard coarse carborundum stone will achieve the same result. The silicar is just a bit longer and I find nicer to use.

The Roller Ball Peening Machine. A review

By

Martin Stevens

The peening machine model I use is a Berger & Schröter 30082 Sensendengelmaschine. I have been using it for a couple of years now and find it an ideal solution for quick and easy blade maintenance for my purposes.
I should also give credit and thanks to Peter Blackwell for telling me about this machine and showing me how to set it up and use it. I can of course only speak from my limited experience – it may be that others disagree with some of my opinions here.

I've generally structured my writing by the following points:

How the machine works
Setup and operation
Strengths and weaknesses

How the machine works

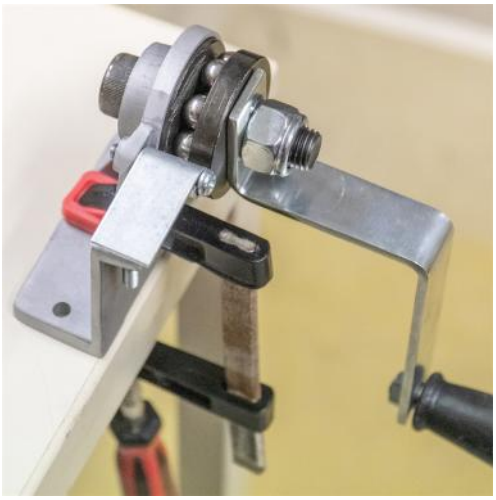

The machine works by rolling a set of steel balls between two plates, one of which is fixed to the main body which is mounted to a sturdy platform such as a workbench, and the other of which is rotated on a shaft by a

hand crank. As the handle is turned, the balls revolve around the shaft and roll over a portion of the fixed plate which is designed to allow a scythe blade to be inserted. By feeding the edge of the scythe blade between the fixed plate and the rolling balls, it is squashed together and incrementally thinned down until it is able to pass through the gap without further deformation. The size of the gap is adjusted by tightening or backing off a locking nut on the shaft, which sets the distance between the fixed and moving plates. Because there are no impacts, the operation is extremely quiet, and because the gap is mechanically set, it produces a very consistent edge thickness, without any risk of overworking once the thickness is correctly set.

Setup and operation

The machine is supplied with guides, but I have found these get in the way more than help, so have removed them all. I find the best way to ensure the correct position of the blade feeding through the machine is to control the angle and height of the edge with respect to reference features at the point of entry.



Probably the most important factor in successful operation is ensuring the edge is fed through at the correct orientation and depth – with a bit of experience I have got the feel for this, although it is helpful to occasionally remove the blade and inspect the edge to see if it is having the desired effect. This depth should ideally stay the same irrespective of how thick or thin the desired final edge might be. Edge thickness is better controlled by adjusting the nut than the depth, because the least effort for thinning the edge occurs when the depth is such that the edge of the blade contacts the very middle face (i.e. tangent) of the balls, since this achieves the maximum mechanical advantage, irrespective of how the gap is set. This doesn't always need to be perfect though – just close enough.

I think the adjustment nut is just a standard coarse pitch thread, so it isn't really optimised for making gap adjustments, but it is adequate. Because of this, though, only very small rotations are required to make fairly big changes to the thickness setting, so careful control is required.

The most effort for normal operation is in keeping the blade pushed down at the correct height in the machine, with a slight forward push to keep it moving forwards through. By contrast, turning the handle takes very little effort. One way of checking that the machine is working correctly is to stop turning the handle while a blade is being fed through. If the blade is stuck because of the tightness of the gap, then it is squashing the edge, so it's working. If the blade just comes out, it isn't feeding in correctly – either back off the nut, or, if necessary, push the blade down harder. One thing to be careful of though is to make sure the



edge doesn't get dragged in too much. If the blade is going too deep into the machine compared to the reference point, then pull it out (while keeping turning the handle) and start again. It may be in this instance that tightening the nut helps, making the gap too small for the blade to be dragged in.

It helps significantly to keep the machine well oiled, and I suspect this also reduces wear. It is also important for it to be attached to something suitably sturdy and stable, so that it doesn't wobble around.

Because of the large overhang at the extreme ends, long blades can be difficult at these points, especially at the very tip where most of the blade's weight is overhanging at the opposite side of the machine to where you're standing. I tend to push down with my forearm, while gripping the blade further along its length, and taking breaks when it becomes uncomfortable. Blades 65 long or less don't give me any problems. The longest blade I can comfortably do by myself is my 95 Rasierschnitt. If there's someone around who can help then all they need to do is support the weight at this point and this problem disappears. Or, alternatively, getting some contraption set up for turning the machine (like Peter's drill powered version) would allow both hands to be used for supporting the blade.

As with other peening methods, starting off a new blade takes more effort than a maintenance peen on an already pretty thin blade. It takes probably around three passes in my experience to get a new blade ready to go. As I alluded to previously, it helps to start with the nut backed off, and incrementally tighten it up to the desired edge thickness.

The final point I'll say about setup, because I don't think anyone else I've spoken to has had this problem, is that the build quality may not be brilliant. I had to do a repair on mine when a small protrusion in the main body casting sheared off after only a short time of operation. I fixed this by disassembling the machine, drilling a hole, and putting a steel pin in to do the same job, and I haven't had any problems since.

Strengths and weaknesses

The main benefit for me personally for this machine, compared to the jigs or freehand peening, is how easily I can now get a good quality, thin, consistent edge on all of my blades. For me, now it's set up, it just works every time without fuss, and I have never damaged a blade (so far!) with this machine (whereas I put plenty of cracks in using a hammer). Although this isn't as important for me, these machines are extremely quiet, so for some people this may be an important consideration. Another thing I haven't mentioned so far is the cost – these machines are only around £30-40, so much cheaper than some other solutions.

Of course, on the other side of things, it is another machine and technique to set up and learn, and this isn't necessarily straightforward. Also, as I have mentioned above, long blades can present certain challenges. Another limitation I haven't mentioned is that, because of how the blade feeds through, this machine is not well suited for repairing chipped edges – in my experience it is best suited for regular maintenance of already thin blades.

Hope this helps!

First impressions of the SF Dengelapparat peening machine.

By

Andi Ricard

I recently bought a Schweiger Fulpmes GMBH Dengelapparat peening machine via Scythe Cymru and have finally got round to unboxing and trying it out.

I haven't used the machine a lot yet, just touched up a



couple of work blades so far.
Having never used one before I had no preconceptions

and not much real idea of how to use it.
I have watched Richard Toogood's excellent video on YouTube (link here) but that was a while ago and I wanted to explore it afresh.

Straight out of the box I bolted it to my workbench and, without making any adjustments whatsoever, have just played with it. I haven't affixed the foot lever yet.
I have found that I can do a good two line peen just by changing the starting position of the handle when I insert the blade. With the handle pushed right up (jaws slightly more open) you can push the blade a couple of mm into the maw and then only pushing the handle down to about half way (it gives you a kind of crimp feeling, sometimes with an audible click) it produces the equivalent of the no 1 jig cap. I do find I have to hold the blade fairly firmly in place to avoid it being spat out but not excessively so.

To achieve the edge peen I lift the handle to the halfway point, insert the edge of the blade into the maw and then push the handle right down. I have found this can produce a razor thin edge comparable to freehand peening. Sometimes if there is a thicker spot (eg a filed out ding) I might need to pinch it two or three times. Similar to freehand peening it is possible to thin the metal too much and cause buckling of the edge but a gentle squeeze seems to sort this out.
I haven't found any need for a further (hammer) edge peen so far. Admittedly I do tend to peen little and often rather than let my edges get thick.

So far I think the machine could be an absolute game changer for people who don't like or aren't very good at freehand peening. It's vastly superior to the jig.
It also means you can peen large numbers of blades, indoors in the warm, by electric light with very little noise. Personally, I enjoy freehand hammer peening but I'm finding that the limiting factors for me are poor eyesight and a low tolerance for sitting down for too long.
It is still important that the blades are clean though. Dirty jaws do not produce a pretty result.
I think, with a bit of practice, it might be possible to peen, say, a new 65cm blade in about 6 minutes.

Jaws – the Austrian Peening Machine

By
Richard Toogood



This is a brief overview of my experience owning and using the awesome manual peening apparatus manufactured by Schweiger Fulpmes (SF), and a heads-up that I will be offering a thorough go-through at the Green Scythe Fair on Saturday afternoon for all you intrigued SABI lot.

This piece of kit is manufactured by the Austrian company SF, who first patented the design and who call it a 'DengelApparat' – or Peening Apparatus. It is (unsurprisingly) manufactured incredibly well and will outlive your rusty joints by a few generations.

The way it works is by depressing a level that is attached via a linkage to 2 jaws. These smooth, slightly curved jaws are held very tightly against each other, and when the lever is moved the jaws rotate against each other in a backward direction. When the edge of your scythe blade is pressed into space where the jaws meet and handle pushed down, the jaws draw the blade in and roll up on to the bevel. The jaws exert such a high squishing force that the metal of your blade deforms (gets peened), in a very precise location, at a precise pressure, with relatively little effort and with no percussion.

One single squish works an elongated oval about 15mm wide and 3mm long, with a bit of overlap you essentially work 1cm per handle action. Depending on the needs of your blade, you might do one to three passes, but 2 is normally sufficient. This brings a full peen into the realms of less than 5 minutes!

I bought this machine when I started teaching a few years ago whilst living in Germany, and immediately realised it was worth every penny and was a total game changer. It is (usually) very quiet, massively faster, very acute and highly controllable. The control comes with where and how tightly you feed the blade into the jaws, but also though a wedge that applies more or less pre-load to the jaws. The more you knock the wedge in, the tighter the jaws press together – the effect of which is that the jaws won't allow you to feed so much of the blade into them, hence working an area closer to (or on) the very edge. The slacker the wedge, the more the jaws roll up on to the bevel and the deeper into the blade you can peen. This is all a matter of millimetres though, not cm. And the more pre-load, the bigger the effects of the peen too. So if you want to rag on it, you can over peen a blade pretty darn easy – it is a powerful thing. You can also get the most beautiful edge peens with the right technique too.

Three limitations that I can see are:
Price. :(it does hit a good £200-300, and either has to be imported or purchased through Scythe Cymru (and available from them at the GSF). It will also need to be mounted to a homemade wooden horse.

Thick edges. If you have a very thick or steep edge, the jaws can have a tendency to spit the blade out with a resounding PING that sounds very alarming but doesn't actually do anything another than give you a bit of a shock.

Repetitive effort. The machine comes as is, with a hand lever, and after doing a load of blades it can be a bit heavy on the one shoulder used to exert pressure. There is also an optional foot lever that replaces the hand lever, which gives the work to a much larger appendage and leaves both hands free to control the blade – highly recommended!

All in all, I cherish this thing, and very rarely have call for using anything else. There may be the occasion where I choose to free hand a part of a blade, but it's rare. Using one still requires understanding and skill and learning the nuances of the machine, but the need for such high motor skills is significantly lower than with learning free hand peening.

I have a full introductory video on YouTube. Search 'How to use a Peening Machine for Continental Scythes'.

Please come and find me on Saturday afternoon at the Green Scythe Fair scything tent for a demonstration and to come try. I will also be peening throughout Sunday as a new peening service, if you want your blade done professionally on the day.

MOWSAICS!

By

Richard Brown



To mow or not to mow: is that the question?

The most frequently asked questions I get when out promoting wild flowers, meadows and scything relate to when to mow; and even whether it is necessary to mow meadows and grassland at all.

The background to these questions is invariably one or both of firstly, not fully appreciating the key role of both mowing and grazing in grassland ecology; and secondly anxiety as to whether indeed they should mow at all.

Scythes are historically what first gave rise to flower rich meadows, and I believe offer the key to understanding and managing these special habitats.

The single most common cause of failure or disappointment with flower rich grassland in my 40 years' experience is a failure to mow enough and at the right time.

This is the reason I took up scything.

An unfortunate 'no mow' anxiety has grown in recent years fed by popular NO MOW and REWILDING philosophies spreading across media platforms. The unintended consequence of this messaging is some confusion and uncertainty as to how best to manage grassland.

Meadows are important, but they are just one of a suite of habitats that are important for wildlife and diversity. I believe these questions and anxieties can be reconciled by a mosaic approach of embracing many diverse strategies simultaneously aimed at creating the most diverse mosaic of different habitats on both a local and wider landscape scale.

Habitat Mowsaics

To emphasize the essential role of mowing in grassland management, and as antidote to 'no mow anxiety' I have recently adopted the term 'Mowsaic' in my talks on grassland management. I want to put the mow back into the concept of creating habitat mosaics.

In my experience the best way to reconcile the many different the management strategies is to think about following as many as possible to create and maximise habitat mosaic both on a local scale and broader landscape scale.

On a simplistic level no one habitat type, and importantly no one management strategy, suits all species. In addition, more mobile animals and insects often require resources from more than one habitat type such as hedgerows to shelter and nest in, and flower rich meadows to feed in. They need to commute easily from one to another so connectivity is important too. It follows that the more diverse a range of connected habitats a site has the greater is the overall diversity it can support.

Grassland comes in many forms from continuously mown lawns and grazed pastures, to seasonally mown meadows to rough grassland with scrub. Each different mowing or grazing regime produces a different habitat potential. None however are as are as potentially rich in flowering species diversity as meadow grassland which is mown in a seasonal cycle synchronised to the life cycle of flowering plants and the insects that use them. This is why I most strongly advocate for meadows.

This is not to suggest that all grassland should be uniformly managed as a meadow. On the contrary, adopting the Mowsaic philosophy means developing a mowsaic of them all: close mown/grazed turf (which is good for ants, ground nesting solitary bees and waxcap fungi); meadow grassland (an essential midsummer habitat resource for insects seeking pollen and nectar) and rough infrequently cut/grazed grassland as an overwintering refuge for small mammals and some insects.

Even within meadow grassland different cutting dates and grazing regimes will produce subtly different results so that mowing in sections over the season as a mowsaic will also increase overall diversity compared to mowing all the meadow on one specified day. There is no one ideal or 'correct' mowing date. The scythe is the perfect tool to exploit this as it offers individuals the flexibility and control to make this possible. As a bonus working in manageable sections through the season helps spreads the workload.

A mosaic approach has potential to deliver results which are greater than the sum of its parts. One of the best examples of this are Wood Meadows which are a dynamic intimate mosaic of both managed meadow grassland and woodland (which I have

covered in a separate blog). On one Wood Meadow in Estonia, 76 species of plant per 1 square metre were counted, making it one of the world's record sites for botanical diversity.

NO MOW?

It is an ecological fact of life that grassland cannot exist at all without mowing and or grazing. Abandoned grassland is quickly lost, turning by the process of succession into woodland. With the assistance of jays planting acorns, my own meadow and lawns would turn to closed woodland in under ten years if I were to stop mowing!

Estonian Wood meadows as mentioned above once covered 20% of Estonia. 95% of these have been lost in recent decades due to abandonment following changes in land use (no mowing). Most of these have become closed canopy secondary woodland. This massive habitat loss mirrors the scale of loss of species rich grassland in the UK and rest of Europe.

NO MOW MAY?

This initiative and slogan from Plantlife has proved very popular with gardeners and I applaud it for changing the established public perception that an uncut front lawn is an unacceptable indicator of neglect and laziness. The no mow campaign has helped promote the value of wildlife friendly flower rich grassland. It has been particularly good for promoting scythe sales when people adopting 'no mow may' find that their existing lawn mower cannot deal with the tall growth aftermath!

So, what is my gripe and why am I blaming the campaign for contributing to 'No Mow anxiety'?

The problem is not the campaign itself which Plantlife carefully and specifically targeted at domestic lawns and for the temporary period in May. Plantlife does give some very sound advice on adopting the concept.



The issue as I see it is the unintended consequences arising from what people actually take and understand from the messaging, and what they choose to do with it.

The most fundamental thing I pick up from people and the media is that people have simplified the message: they forget the 'May' context and now believe that mowing is generally bad and should be avoided or delayed as far as possible. I find myself selling more scythes but having to spend more time counselling their users that it is both Ok and good to mow!

The other typical concern I hear from other conservation professionals is that some adoptees of 'No Mow May' "invite" pollinating insects into their garden with flowering lawns then come 1st June blitz them all obliterating them with strimmers and even worse chemical sprays!

The slogan is also is a bit prescriptive. Here again a more flexible mowsaic approach can usefully apply, even including May mowing! for example:

• Keep pathways, edges and some areas close mown even through May. The ants will thank you as the absence of taller shading grass keeps the soil at the higher temperature they need. Your sceptical neighbours may also appreciate the intentional appearance conveyed by neat edges and paths.

• For many years I have myself adopted no mow June instead (I keep mowing my lawns into May). This produces a short flowering summer lawn that stands for longer without getting tall and rank. It favours short herbs like selfheal, lawn daisies and white clover which don't thrive in lax cut or grazed swards. These plants can grow and flower in my lawn but not amongst the longer grass of my meadow.

• I often choose to cut back rough tussocky grassland in early May to keep it in balance and prevent invasion of brambles and scrub. To me May mowing seems ideal timing for tussocky grassland when needed (not necessarily every year). Sheltering overwintering insects and invertebrates in theses areas are most likely to have emerged by the beginning of May and moved out into the flower rich meadow I provide next door. Earlier winter or spring cutting of these areas would be bad as many insects hold back emerging until the meadows start to flower. A May cut gives time for tussocky grassland to regrow as refuge for the following winter (this type of coarse grassland is dominated by a few grasses and tall herbs, so plant diversity is not the priority here). From a practical scyther's standpoint I also find rough grassland easiest to tackle at this time as the sward is a mix of old dead stalks weakened by winter decay and weathering, and fresh succulent spring growth.

• Cow Parsley. To prevent this spreading by seed from the margins into the meadow I cut it back immediately after flowering and before seed set. Typically, this is at the end of May. I enjoy the billowing white May bonanza, as do pollinating insects like hoverflies which like flat topped umbels. But I prefer cow parsley to be an element of my mowsaic, not for it to take over the whole meadow (as it easily could).

The No Mow May slogan has been a great success but is open to misinterpretation. It needs additional education effort to support it, and a more nuanced

holistic mowsaic application.
Wild flower meadows have become increasingly popular in gardens. I would prefer these were promoted more strongly over more limited value 'no mow lawns'.

REWILDING

No Mow May cannot take all the blame for 'No Mow anxiety'. As I mentioned in my introduction the populist media interpretation of rewilding I believe also feeds this anxiety. Again, this is understandable from an over simplistic world view that the problems of our planet are largely manmade (which they currently are) and so the answer is to remove humans from the equation - so no mowing.
Rewilding has developed into a massive movement worldwide with many different more nuanced and realistic approaches and philosophies. It has come to mean different things to different people and in different countries. These are too complex to go into here, so instead I will pull out a few key points I feel relevant to this NO MOW discussion.
Rewilding is best understood as a process rather than a set goal with an end point - such as returning to some imagined prehistoric Pleistocene idyll before humans. It is the journey not the destination that matters.

An imagined pre-human Pleistocene idyll in the Yorkshire Dales c.120,000 BP, with megafauna based on bones found in limestone caves close to Tom Lord's Winskill farm where have held past scythe Festivals.
At its core rewilding aims to hand back control to nature to restore damaged ecosystems with a minimum of human intervention. In many ways this is just a trendy rebranding or new branch of the established field of Ecological Restoration. The concept of Ecological Restoration began back in the 1930s and can be defined as 'the process of assisting the recovery of an ecosystem that has been degraded, damaged, or destroyed'
The difference, if any, is in emphasis. In my own work in this field (restoring flower rich grasslands), I have always believed that working with nature in the driving seat was also fundamental principle, and believe pragmatically that success comes from following and facilitating in partnership with nature patterns that already exist and that have arrived by natural ecological processes.
Rewilding claims not to look back at these pattens as reference just leave nature to 'do its thing'. In practice I see most rewilding schemes extensively reference the past, with great emphasis on extinct iconic species like beavers and lynx, and attempts to genetically engineer aurochs back from extinction As well as reintroduction of chosen species most rewilding schemes in practice seem to involve significant input and control by humans on the ground. One of the first steps of the Ken Hill Rewilding scheme I observed on my doorstep here in Norfolk was to erect a massive 15km perimeter fence and boundary ditch (to 'manage' beavers I believe). Knepp spent a lot of tax payers grant money on fencing too!
Within Rewilding there is much talk about reintroducing so called 'keystone species' which potentially deliver big effects on the environment. In the UK beavers are the most fashionable must have accessory for any attention seeking rewilding scheme.



I don't dispute what beavers can bring to naturalise watercourses and by their river engineering alleviate flooding risks. But what I think this focus misses is the elephant in the room: humans. Humans replaced the elephant, other megafauna and top predators way back in the late-Pleistocene to become the most significant keystone species ever.
This is the situation we inherit. Ok so we can't fail to recognise that humans have abused their position as keystone species making it awkward to talk about human influence and role in positive terms alongside the extinct animals we persecuted in the past. But to exclude the role of humans in the ecological restoration of our country and planet is neither helpful or practical. To be fair as the Rewilding concept is maturing it is getting more realistic and pragmatic. The first listed principle from the charity 'Rewilding Britain' is now to "Support people and nature together".
The notion that most grasslands derive from human management and as such are essentially degraded former woodlands only suitable for reforestation or rewilding is actually threatening to native grassland ecosystems and biodiversity worldwide.
A Habitats Directive of the European Union recognises the high conservation of some 63 habitats of exceptional biodiversity which depend on use and maintenance work by people, mostly based on low-intensity traditional farming. This of course includes meadows which by definition are mown grassland – originally by scythe. These semi-natural man-made habitats can be an important contributor to overall diversity on a landscape scale. They even sometimes have the potential to exceed the biodiversity potential of purely wild systems as with my wood meadow example given earlier.

Conclusions
With this article I am really not knocking one approach in favour of others, just seeking a more holistic view. I have tried to argue that a multiplicity of approaches to ecological restoration are valid. This includes an undeniable role for humans as keystone species with the specific example of traditional mowing with scythes to maintain flower rich meadows.
The most significant outcomes for ecosystem functioning and biodiversity do not come from following a single narrow doctrine or suite of options but by facilitating the development of a complex interlinked mosaic of different habitats. As well as this most diverse approach by default delivering the most diverse outcomes, it hedges our ecological bets. With this approach we can still progress with our incomplete understanding of all the complex ecological processes in play. We do not need to debate and speculate what past pristine Pleistocene landscapes looked like, and we can hope to future proof our environment for the effects of climate change without knowing what the future holds.



A Creative Adventure.

Design and Development of a Peening Machine

By
Colin Close

A number of years ago I wrote an article for The Windrow about peening jigs for which I did much internet research. I found several interesting anvils and machines and eventually built one to a Russian design. After much modification the machine did work but eventually broke the device that was being used to power it! Around that time Richard Brown came up with a the brilliant idea of using a SDS power hammer to provide the drive to the basic peening jig. This idea combined which a solid piece of old woodworking machinery created an effective peening system. Alas not everybody has access to redundant and essentially non portable woodworking machinery that can be pressed into service for this purpose.

A synapse fired in my head and I wondered whether I could combine the SDS hammer idea and the broken Russian jig.
I got out the angle grinder and the welder and after



an afternoon of work I had adapted the thing to carry a semi-broken SDS hammer which I had scrounged from Richard. The original jig utilised a swinging anvil which was retained. I tried it out on an old blade that had folded up and was unrecoverable; I could peen the edge down to aluminium foil thickness but it was



totally uncontrollable. The striker (a modified chisel) wandered around all over the place making any attempt to keep the blade in position with a stop completely ineffective. I decided to add a guide to constrain the striker at least in the sideways direction but I made a `mistake when grinding the guilde flats on the chisel and it ended up positioning the striker at a slight angle to the blade. I was a bit miffed about this but I thought I'd run the blade through it anyways! There were several ripples in the blade (the kind you get from overpeening) I discovered that to my surprise running this angled striker over them actually mostly removed them. This was a completely unexpected but encouraging result. It seemed that the principle of combining the old Russian jig with a power hammer may have promise.

The big problem with the basic Russian jig was it's

weight, the construction had had to be extremely rigid to resist bending due to it's operating principle and could not be considered portable by any stretch of the imagination. It also involved a lot of welding and so it was difficult to make.

So to set the creative juices flowing I set out a brief for a new design. In a previous life I had been involved in commercial design and most design briefs (at least those that are purely functional rather than artistic) come down to a few basic points. The primary point is that the cost of manufacture must be low, from this come many other prerequisites which are implicit in that requirement. Thus it must use the minimum of material which means it will be light, cheap and easy to transport. This applies to both the component parts and the finished item. This, by implication requires the design to be simple in construction as well as simple to assemble.
The ability of humans to create tools is unsurpassed in this world with new methods of manufacture being regularly created examples such as 3D printing of metal components which is making possible many new designs that were previously impossibly costly to develop and manufacture.
Another computer driven method which has reached the fore is that of the laser cutting of metal sheet, a process that has been around for some years but has recently reached a maturity that makes it very cost attractive. Recently I had made an access bridge for part of my garden it was 3 metres long and a metre wide. The laser cut steel for this bridge was just over £150. Very economic indeed!!
I decided to create the design around this process. This choice immediately placed a restraint on the design as laser cutting is essentially a 2D process. Thus every part of the design needs to be flat, the flat items may have different thicknesses but the thicknesses must be constant throughout each individual part. A further constraint is that it is not possible to cut a circular hole in the material that is smaller than the material thickness.
Below is a picture of the first design iteration; there are two welds that form the construction of the swinging anvil the rest simply bolts together. I just dunnied part of the SDS hammer for speed and

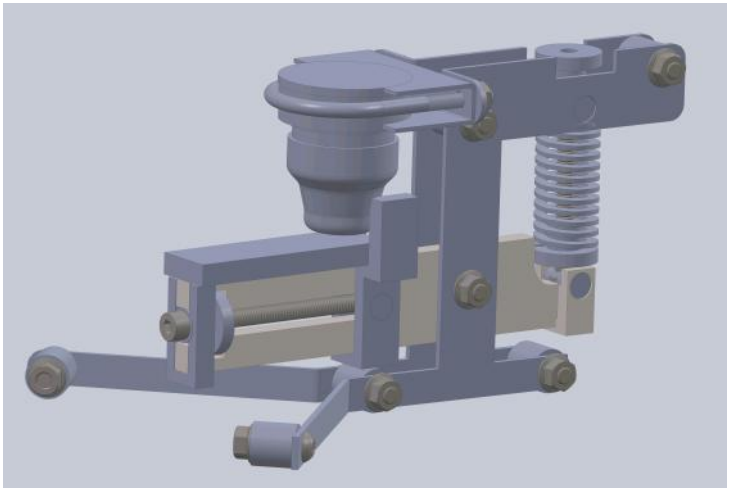

simplicity. The SDS tool is secured usung and car exhaust clamp. These come in a plethora of sizesbut more on that later.

Did it work? Well, yes and no, it peened soft material adequately but trying to peen a scythe blade immediately revealed a major shortcoming. The stop used to position the blade under the striker had it's arms placed too far apart so when peening a blade with any significant curvature the edge would not be under the striker. This is illustrated in the diagram below.

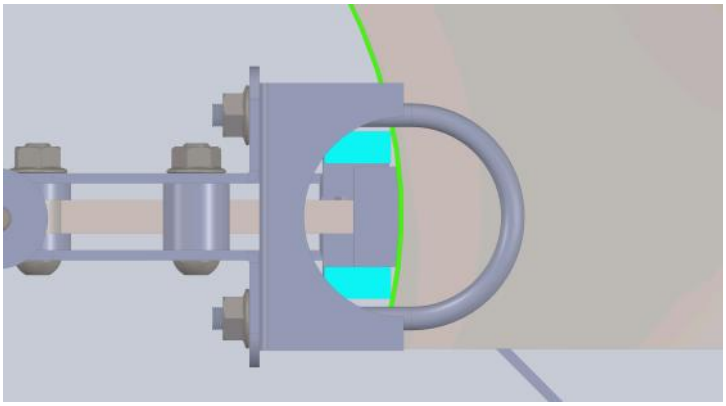

This is a consequence of an insufficiently considered design brief or what is colloquially known in design circle as a cock-up! Notwithstanding this oversight the general construction was strong and light and easy to assemble apart from the anvil assembly which required welding but more of that later. I soon realised that the only way to hug the curve of the scythe to the striker was to have the stop as close to the striker as possible and so I embarked on a new arrangement which involved an additional part which replaced the simple barrel nut. You can see part of the arrangement in the picture below. Looks good doesn't it!
Alas it is complete rubbish!! Heat distortion saw to

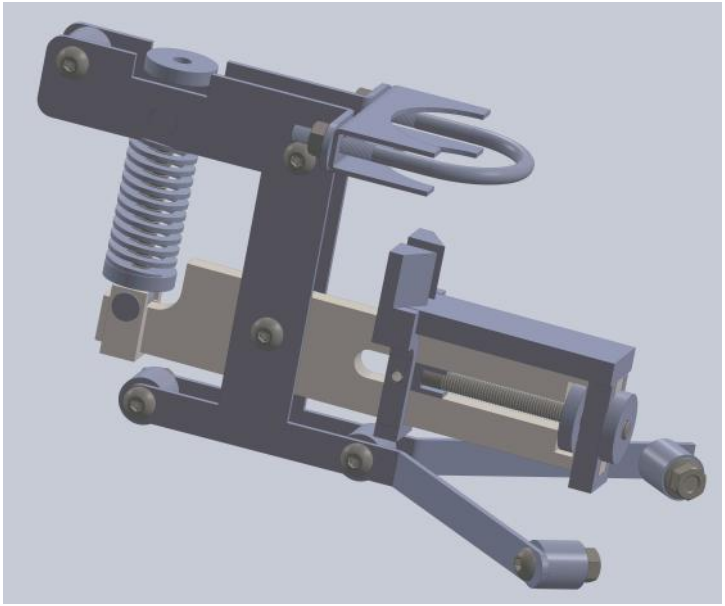

that as the slot in which the new guide ran is tapered and it required much work with a file to make it functional. Even when fettled it did not work as well as it should have. It kept tipping backwards when the

hammer was run and the blade then slipped underneath it run destroying the setting. It had though served a purpose as it had thoroughly discredited any design attempts to use a screw adjustable stop. There is a a lot of vibration with an SDS hammer which means that stuff works loose so after some use the stop loses it's settings. My dreams of an adjustable stop were not to be.
Often one reaches a stage in a design where it appears that no further progress can be made and disappointment looms. For a week of nights just before sleeping I was picturing the beast in my head groping for a solution to positioning the scythe blade but none came. The only thing I was sure of was that the stop should not be connected in any way to the swinging anvil as this was just not stable enough.
When despair looms and you think all is lost then up pops a new view. What if the stop swung from the same pivot point as the anvil?.... but that was too complicated and then the thoughts started tumbling in! It didn't have to be the same pivot point as the anvil it could pivot from a point above the anvil and then what would happen if there was a swinging hammer pivoting from the same point and so the arrangement below was born; the stop was simple two flat strips each with a hole in it with the mini-hammer sandwiched in the middle. The mini-hammer simplifies the tool because it takes away the difficulty of modifying expensive SDS tools as the required tool shapes can be cut directly by laser.
So the jig design moved on from the impasse towards completion.
I realised that to be able to develop the design further I might have to use a different SDS hammer and that to allow the use of even the existing one I would have to be able to adjust the height so the new arrangement could be tested. To that end I threw away the cheap and cheerful exhaust clamp and replaced it with something more solid that could be adjusted for height. This simplified the frames and allowed a good range of adjustment for the hammer height.
I built a version with the secondary hammer and the new idea for the stop and I hit a few issues. The most annoying one being the hardening of the steel for the hammer and anvil. I specified the steel to be used for the parts to be a grade that could be hardened but I

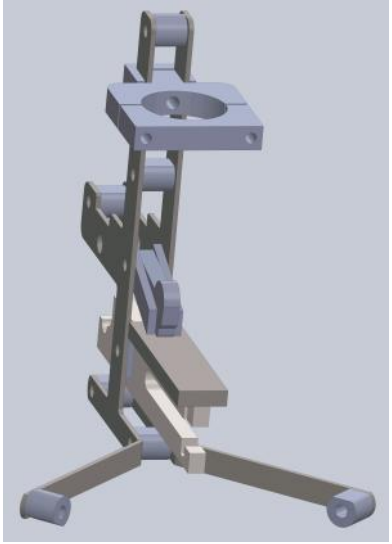

was unable to flame harden it (I suspect it was not the steel I specified!) The result was that hammer collapsed under the impact. The anvil had a similar problem. Both were fine on soft material but a scythe blade was a no no. It did prove however, that the hammer arrangement and stop was a practical solution. One of the problems with having the stop pivoting on the same axis as the hammer is that there is no straightforward way to make it adjustable. Initially this seemed to be an insurmountable problem but then it occurred to me that if the stops were of different lengths one could move position of the edge in relation to the hammer. This is illustrated in the following diagrams.

Striking edge is green stops are blue
Left is edge peen, right is max peen. Note that the angle of the strike changes as the hammer moves deeper into the edge. Just what is needed

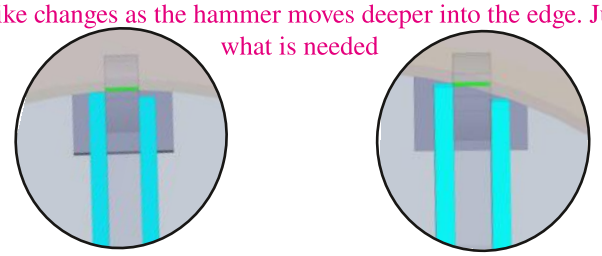

To try this out I modified the hammer by welding a piece of spring steel from the tine of a hay tedder to it. Once hardened and ground to shape I was sure it would be effective. I cut two strips of steel, one longer than the other and placed them either side of the hammer and I had my stop.
The initial tests were a failure.. The stops were bouncing up and down so much that the blade was sliding underneath them. I could hold one of them

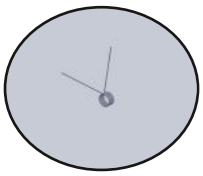

down lightly with a finger and hold the blade against the stop and it didn't slide underneath it. The the solution to this would be a some sort of spring. I found a couple of torsion springs like those below and pivoted them around a screw just above the hammer pivot. Problem solved!

I have been able to peen most of the edge of an old bush blade with it except the tip which is very thick this will need an SDS more powerful than my current battery powered one. There is still work to do on the shape of the swinging hammer head and it's relation to the geometry of the stops but the device is functional.

It is instructive to see how that as the design progressed; it actually became simpler
Here are a few examples:-

The swinging anvil went from this---

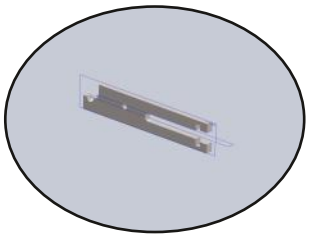

To This

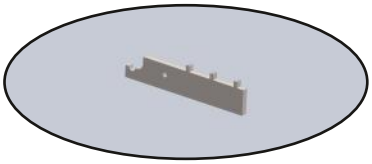

The anvil stop went from this:-

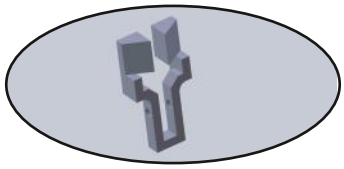

To This

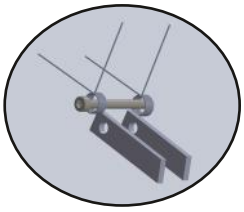

The hammer mount went from this

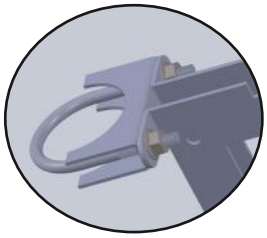

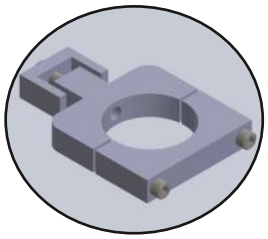

to this

and finally will be this

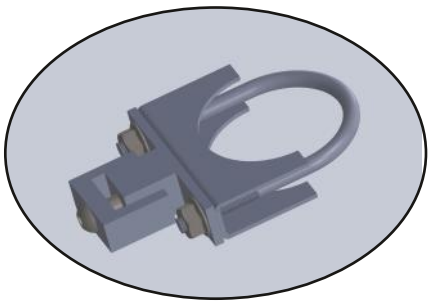

These new parts were added

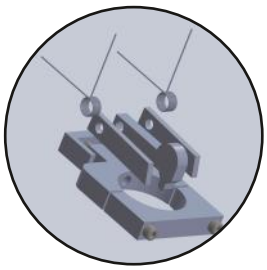

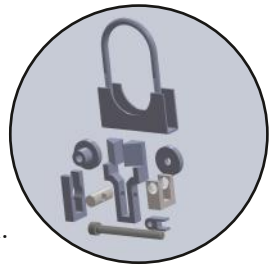

and these removed.

With some additional work I have been able make the design weld free. You can see the solution opposite the anvil plate and arm are now riveted together. I considered this to be an adeqiuate solution having seen the railway bridge by I. K. Brunel at Saltash, Plymouth which is constructed from wrought iron plates rivetted together. This bridge has been standing now since 1859 and carries the main rail route to Cornwall. The rivets on that have held up for 166 years so I figure what's good enough for Brunel is good enough for me!!

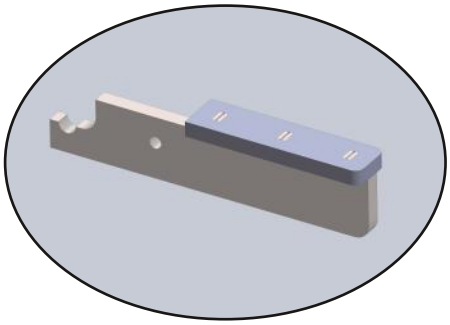

Here's a picture of the prototype; the two 'ears' at the top of the frames will go when the final hammer clamp assembly is manufactured. Why have I gone to all this trouble? It's like this; I can neither draw nor paint pictures; I try but when I look at some of the



sixth form art that comes out of local schools I know I will never achieve anything pictorially artistic but I have the creative urge. So I turn to the creation and development of machines. Engineering is as much as an art as it is a science, it has it's own set of palettes and techniques and can even create things of impresssive elegance and beauty. This device alas is neither but it will serve a useful purpose. It can be put together from a simple kit of parts with the minimum of tools and is available to anyone who wants it.

Now I'm sure that this has all been very boring to many of you, but just reflect on the amount of engineering artistry that has gone into creating a scythe blade that cuts grass like no other tool you have in your shed. When you hold a scythe you have in your hand a history of hundreds of years of mans' ingenuity.

MANAGING HALBATHIC

By
Peter Totman

Halbathic is a Quaker Burial Ground on the outskirts of Liskeard in Cornwall. It was created in the 1680's when a local Quaker farmer donated the corner of a field for the purpose. Traditionally, Quaker graves are not marked though careful records are kept as to where people are interred. Memorial headstones are usually fixed to the surrounding walls. There are exceptions. If you ever visit Charlbury in West Oxfordshire, the burial ground associated with the Meeting House has grave markers. There is a story that back in the day a wealthy Quaker from Falmouth insisted on having a headstone on his grave. The Meeting acquiesced to his demand and had the headstone buried with him.



But I digress. The burial ground, which closed for burial in 1959, is in an isolated position and for the time I have been associated with the Liskeard Meeting, maintenance has been an on-going problem. Members of Meeting come from a wide area and only a few elderly Quakers actually live or lived within Liskeard. For several years we paid someone to come in twice a year to mow and remove the vegetation. When they were no longer able to do it we had to fall back on our own resources. The burial ground is roughly 40 by 60 metres in size and too big and rough for domestic lawn mowers, and access difficult nay, impossible for the ride-on type of machine. When discussing the problem at Meeting our clerk mentioned that Falmouth cut their burial ground with a scythe. We agreed it would be a possibility and I was keen to have a go at scything as long as I could wear a black robe. Our clerk did some asking around and as a result contacted Kevin Austin at Skyegrove, asking if he could come along and advise us.

I should probably say at this point that Quakers never do anything quickly and there was a gap of about three years between the gardener giving up and Meeting contacting Kevin. In mitigation, Meeting had decided to manage Halbathic as a nature site. This was back in 2015, before rewilding had been invented. In the meantime the burial ground became a field of bracken. My thought at the time was to quietly let it go back to nature, but some members of Meeting were not so sanguine. A few of us met with Kevin on a damp October morning in 2018, not knowing quite what to expect. Mr Austin turned up with a car load of scythes, rakes and other paraphernalia of an exotic nature. He quickly scanned the area and said "That bracken has got to go", handed out some rakes and hayforks to us helpers and set about the bracken with the scythe. Gosh, there was so much of it, Kevin mowed and the four of us cleared and carted, but by mid-day the back had been broken. At this point the other helpers made their (genuine) excuses and departed.

With the bracken cleared it was time to take on the (VERY) rank grass and bramble. Kevin handed me a scythe and some instruction on its use, then set me to cutting out the bramble while he tacked the grass. I wished I'd taken up the scythe years ago and not waited till retirement; what a wonderful instrument.

Under Kevin's watchful eye, I thoroughly enjoyed myself and I was hooked. I signed up for one of Kevin's beginners courses the next May, got the basic equipment and I've never looked back. Kevin came up with a management plan that involved cutting and clearing the bracken every May/June then mowing and clearing the whole area in the autumn, ready for winter. Kevin suggested sewing yellow rattle after one cycle of management, which we did in the autumn of 2019. Kevin joined us on these sessions, giving help



and advice and providing the yellow rattle seed for the autumn cut. I think he was secretly quite impressed that we were there to do the work. His experience seems to have been that people will hire him as an advisor then expect him to do all the work too.

By the spring of 2020 the bracken was visibly weakened and a host of new plants were beginning to show themselves. About 29 different species have now been identified in the burial ground, quite apart from the different grasses.



All the time my proficiency with the scythe has been improving, mowing became easier and swifter and the natural health of Halbathic also improved. There is such diversity there now, and the bracken so weakened that rather than mowing the whole are in the spring I use a 40cm brush blade to 'take out' individual bracken



plants leaving other species (mostly) intact…though the temptation to mow the lot is quite hard to resist. Still, it's quite satisfying to tread lightly through the burial site decapitating the wretched brake and I do get to mow a swathe along the walls with the





headstones attached, to keep the bramble down, you understand. Spring grass is so tempting!

Now that the bracken is under control and diminishing, bramble has become an issue in the main body - if that's the right word - of the site, so for the last couple of years I've been surgically removing bramble as well as bracken; but not at the same time. I call it the Halbathic Uncertainty Principle. The more bracken you cut the more bramble you miss and the more bramble you cut the less bracken gets sliced. Some areas are worse than others, and those receive special attention. And that's where we stand today.



Each year Halbathic becomes better and better and it's lovely to watch the succession of plants through the seasons. Primroses, daffodils, violets and bluebells have all taken their turn since early spring. The rattle is now pushing through along with the vetches umbellifers and plantains. And there's so much more to come.

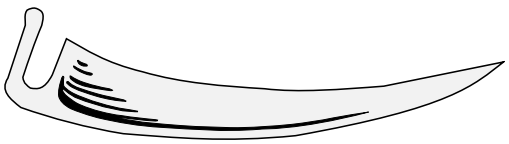


June 2024


May 2025

AND FINALLY!!

For all the Eukelele players out there.

Scythin'

Arranged by Ted Waldron

After Groovin' by The Young Rascals

Link to original. https://youtu.be/4JIq8Zn0AJE?si=3NTHgd-be0FPD_-_

Capo 1

[Intro]
D Em D Em

[Verse 1]
D Em D Em
Scythin' . . . on a sunny afternoon
D Em D Em
Peening . . . couldn't get done too soon
F#m Em
I can't imagine anything that's better
F#m Em
Cutting windrows in a team together
F#m G A
There ain't a place I'd like to be instead of . . .

[Verse 2]
D Em D Em
Scythin' . . . down among the lucky few
D Em D Em
Doin' . . . the very thing we like to do
F#m Em
The edge is sharp, the stone it keeps it keen
F#m Em
The lying swathes show just where we've been
F#m G A
And no pollution, scything is just green . . .

[Chorus]
D Em D Em
Scythin' . . . on a sunny afternoon
D Em D Em
Peening . . . couldn't get done too soon

[Post-Chorus]
D Em D Em
Ah-ha-ha Ah-ha-ha
D Em
Ah-ha-ha

[Bridge]
F#m Em
We'll keep on spending sunny days this way
F#m Em
Cutting grass and turning it into hay
F#m Em
Blade and snath moving sward away
G F#m Em A
The work is hard, but it just feels like play . . . when we're

[Chorus]
D Em D Em
Scythin' . . . on a sunny afternoon
D Em D Em
Peening . . . couldn't get done too soon
D Em
Scythin', ah-ha-ha
D Em
Scythin '
(fade out)

